Airdach
Heating &
Air Conditioning

Airdach Multi Position Air Handler

ECM Motor
Cooling capacity: 24-60 kBtu/h

Contents:

1 PRODUCT LINEUP.....2
2 NOMENCLATURE.....2
3 SPECIFICATIONS.....3
4 DIMENSIONAL DRAWING.....5
5 ELECTRICAL CHARACTERISTICS.....6
6 AIRFLOW DATA.....11
7 ACCESSORIES.....13
8 WIRING DIAGRAMS.....14

AHRI CERTIFIED® www.ahridirectory.org Unitary Small AC AHRI Standard 210/240 Certification applies only when the complete system is listed with AHRI.

C ETL LISTED US Intertek

Standard Features:

- High heat-transfer efficiency and low static-pressure drop A-shaped coil.
- Foil-faced insulation to prevent energy loss through the cabinet.
- Factory-sealed cabinet certified to achieve 2% or less air leakage rate at 1.0 inch water column.
- Multi-stage blower Speed Control to align with varying capacity demands.
- Multi-speed constant-torque ECM motor.
- 4-position installation: Upflow, Horizontal Right, Downflow, Horizontal Left.
- Horizontal and vertical condensate drain pans standard, primary and secondary condensate fittings.
- Field-installed electric heater kits 5, 7.5, 10, 15, 20 kW available as accessories. Multiple electrical entry locations.
- Dual front panel, volute and coil with slide track, TXV with threaded connection for easy maintenance.
- Integrated filter rack with toolless door access.
- Easy-to-braze copper evaporator connection.
- TXV designed for easy piston replacement.
- All-aluminum heat exchanger extends product lifetime.
- Advanced internal welding process to reduce potential corrosion.
- AHRI and ETL listed.
- Polymer condensate drain pan with UVC inhibitor to extends product lifetime.
- Fully-insulated cabinet design.

- R454B refrigerant sensor ensures safe operation.
- R454B refrigerant sensor is factory-installed, making unit suitable for more room types and applications.

1 Product lineup

Model	A4DH2400ME1DT A4DH3600ME1DT A4DH4800ME1DT A4DH6000ME1DT
Power supply	208/230V-1Ph-60Hz
Appearance	

3 Specifications

	A4DH2400ME1DT	A4DH3600ME1DT	A4DH4800ME1DT
NOMINAL RATING			
Cooling (BTU/h)	23200	34200	45000
CFM (High/Low range)	740	1240	1540
External Static Pressure (in.w.c) [Pa]	0.58 [145]	0.58 [145]	0.58 [145]
ELECTRICAL DATA			
Voltage / Phase(60Hz)	208V/230V-1ph-60Hz	208V/230V-1ph-60Hz	208V/230V-1ph-60Hz
Min. / Max. Voltage (V)	187/253	187/253	187/253
Min. Circuit Amps (MCA) (A)	3.3	4.2	5.6
Max. Overcurrent Protection (MOP) (A)	15	15	15
FAN MOTOR			
Motor Type	ECM	ECM	ECM
Capacitor (uF)	/	/	/
Horsepower (HP)	1/3	1/2	3/4
Rated RPM	1050	1050	1050
MOC	2.6	3.3	4.5
FAN BLOWER			
Material	Metal	Metal	Metal
Type	Centrifugal	Centrifugal	Centrifugal
Diameter(in.) [mm]	10 [278.5]	10 [278.5]	10 [278.5]
Height(in.) [mm]	8 [207]	10 [271]	10 [271]
Coil Drain Connection FPT (in.)	3/4	3/4	3/4
EVAPORATOR COIL			
Type	Aluminum-Hydrophilic Aluminum	Aluminum-Hydrophilic Aluminum	Aluminum-Hydrophilic Aluminum
Tube Material	Aluminum	Aluminum	Aluminum
Tube Size (in.)	9/32	9/32	9/32
SOUND POWER (dB)	67	70	72
REFRIGERANT CONNECTION SIZE			
Liquid Line Size (O.D.) (in.)	3/8	3/8	3/8
Suction Line Size (O.D.) (in.)	3/4	3/4	7/8
DIMENSIONS			
Width (In.) [mm]	18-1/8 [460]	19-5/8 [500]	22 [560]
Height (In.) [mm]	41-3/8 [1050]	46-1/2 [1180]	54-1/2 [1385]
Depth (In.) [mm]	20-1/2 [520]	21-5/8 [550]	24 [610]
Packaged dimension (W × H × D) (In.) [mm]	20-3/4 × 42 × 24-3/16 [527 × 1067 × 614]	22-5/16 × 47-1/8 × 25-3/8 [567 × 1197 × 644]	24-11/16 × 55-3/16 × 27-11/16 [627 × 1402 × 704]
SERVICE VALVE			
Liquid (in.)	3/8	3/8	3/8
Suction (in.)	3/4	3/4	7/8
WEIGHT			
Net weight (lbs.) [kg]	101 [46]	121 [55]	150 [68]
Shipping weight (lbs.) [kg]	112 [51]	134 [61]	165 [75]

High-Efficiency Air Handler

	A4DH6000ME1DT
NOMINAL RATING	
Cooling (BTU/h)	54000
CFM (High/Low range)	1750
External Static Pressure (in.w.c) [Pa]	0.58 [145]
ELECTRICAL DATA	
Voltage / Phase(60Hz)	208V/230V-1ph-60Hz
Min. / Max. Voltage (V)	187/253
Min. Circuit Amps (MCA) (A)	7.0
Max. Overcurrent Protection (MOP) (A)	15
FAN MOTOR	
Motor Type	ECM
Capacitor (uF)	/
Horsepower (HP)	3/4
Rated RPM	1050
MOC	5.6
FAN BLOWER	
Material	Metal
Type	Centrifugal
Diameter(in.) [mm]	10 [278.5]
Height(in.) [mm]	10 [271]
Coil Drain Connection FPT (in.)	3/4
EVAPORATOR COIL	
Type	Aluminum-Hydrophilic Aluminum
Tube Material	Aluminum
Tube Size (in.)	9/32
SOUND POWER (dB)	75
REFRIGERANT CONNECTION SIZE	
Liquid Line Size (O.D.) (in.)	3/8
Suction Line Size (O.D.) (in.)	7/8
DIMENSIONS	
Width (In.) [mm]	22 [560]
Height (In.) [mm]	54-1/2 [1385]
Depth (In.) [mm]	24 [610]
Packaged dimension (W × H × D) (In.) [mm]	24-11/16 × 55-3/16 × 27-11/16 [627 × 1402 × 704]
SERVICE VALVE	
Liquid	3/8
Suction	7/8
WEIGHT	
Net weight (lbs.) [kg]	150 [68]
Shipping weight (lbs.) [kg]	165 [75]

4 Dimensional Drawing

Model Size	Unit Height "H" in. [mm]	Unit Width "W" in. [mm]	Unit Length "D" in. [mm]	Supply Duct "A"	Unit Weight (lbs.[kg])
24	41-3/8 [1050]	18-1/8 [460]	20-1/2 [520]	16 [406]	101 [46]
36	46-1/2 [1180]	19-5/8 [500]	21-5/8 [550]	18 [456]	121 [55]
48	54-1/2 [1385]	22 [560]	24 [610]	19-1/2 [496]	150 [68]
60	54-1/2 [1385]	22 [560]	24 [610]	19-1/2 [496]	150 [68]

5 Electrical Characteristics

Electric Heater Kit Breaker Information

NO.	Kit	Description	Breaker	Ref.Air Handler Use
1	EHK-05*	5kW Heater	Max. 240 V, 30 A, 2 P	24, 36, 48, 6
2	EHK-08*	7.5kW Heater	Max. 240 V, 50 A, 2 P	24, 36, 48, 60
3	EHK-10*	10kW Heater	Max. 240 V, 60 A, 2 P	24, 36, 48, 60
4	EHK-15*	15kW Heater, double breaker panel	Max. 240 V, 60 A, 2 P Max. 240 V, 30 A, 2 P	36, 48, 60
5	EHK-20*	20kW Heater, double breaker panel	Max. 240 V, 60 A, 2 P	36, 48, 60

Note: Heater model number digits "*": A, B, C, D, E, F, etc.

Electric Heater Kit Electrical Data (only Electric Heat)

Heater Kit Model Used	Air Handler Model	Electric Heat(kW)	Min. Circuit Ampacity (A)		Max. Fuse or Breaker (HACR)Ampacity (A)		Minimum Heating Blower Speed				
			240V	208V	240V	208V	1	2	3	4	5
EHK-05*	24	5	26.1	22.6	30	25	●	●	●	●	●
EHK-08*		7.5	39.1	33.9	40	35	×	×	●	●	●
EHK-10*		10	52.1	45.2	60	50	×	×	●	●	●
EHK-05*	36	5	26.1	22.6	30	25	●	●	●	●	●
EHK-08*		7.5	39.1	33.9	40	35	×	●	●	●	●
EHK-10*		10	52.1	45.2	60	50	×	×	●	●	●
EHK-15*		15	52.1/26.1	45.2/22.6	60/30	50/25	×	×	●	●	●
EHK-20*		20	52.1/52.1	45.2/45.2	60/60	50/50	×	×	×	●	●
EHK-05*	48	5	26.1	22.6	30	25	●	●	●	●	●
EHK-08*		7.5	39.1	33.9	40	35	●	●	●	●	●
EHK-10*		10	52.1	45.2	60	50	×	●	●	●	●
EHK-15*		15	52.1/26.1	45.2/22.6	60/30	50/25	×	×	●	●	●
EHK-20*		20	52.1/52.1	45.2/45.2	60/60	50/50	×	×	×	●	●
EHK-05*	60	5	26.1	22.6	30	25	×	×	●	●	●
EHK-08*		7.5	39.1	33.9	40	35	×	×	●	●	●
EHK-10*		10	52.1	45.2	60	50	×	×	●	●	●
EHK-15*		15	52.1/26.1	45.2/22.6	60/30	50/25	×	×	●	●	●
EHK-20*		20	52.1/52.1	45.2/45.2	60/60	50/50	×	×	×	●	●
EHK-05*	61	5	26.1	22.6	30	25	×	×	●	●	●
EHK-08*		7.5	39.1	33.9	40	35	×	×	●	●	●
EHK-10*		10	52.1	45.2	60	50	×	×	●	●	●
EHK-15*		15	52.1/26.1	45.2/22.6	60/30	50/25	×	×	●	●	●
EHK-20*		20	52.1/52.1	45.2/45.2	60/60	50/50	×	×	×	●	●

Note: Heater model number digits "*": A, B, C, D, E, F, etc.

Electric Heater Kit Electrical Data (Electric Heat combines with Indoor motor)

Heater Kit Model Used	Air Handler Model	Electric Heat(kW)	Min. Circuit Ampacity (A)		Max. Fuse or Breaker (HACR)Ampacity (A)		Minimum Heating Blower Speed				
			240V	208V	240V	208V	1	2	3	4	5
EHK-05*	24	5	28.7	25.2	30	30	●	●	●	●	●
EHK-08*		7.5	41.7	36.5	45	40	×	×	●	●	●
EHK-10*		10	54.7	47.8	60	50	×	×	●	●	●
EHK-05*	36	5	29.4	25.9	30	30	●	●	●	●	●
EHK-08*		7.5	42.4	37.2	45	40	×	●	●	●	●
EHK-10*		10	55.4	48.5	60	50	×	×	●	●	●
EHK-15*		15	55.4/26.1	48.5/22.6	60/30	50/25	×	×	●	●	●
EHK-20*		20	55.4/52.1	48.5/45.2	60/60	50/50	×	×	×	●	●
EHK-05*	48	5	30.6	27.1	35	30	●	●	●	●	●
EHK-08*		7.5	43.6	38.4	45	40	●	●	●	●	●
EHK-10*		10	56.6	49.7	60	50	×	●	●	●	●
EHK-15*		15	56.6/26.1	49.7/22.6	60/30	50/25	×	×	●	●	●
EHK-20*		20	56.6/52.1	49.7/45.2	60/60	50/50	×	×	×	●	●
EHK-05*	60	5	31.7	28.2	35	30	×	×	●	●	●
EHK-08*		7.5	44.7	39.5	45	40	×	×	●	●	●
EHK-10*		10	57.7	50.8	60	50	×	×	●	●	●
EHK-15*		15	57.7/26.1	50.8/22.6	60/30	50/25	×	×	●	●	●
EHK-20*		20	57.7/52.1	50.8/45.2	60/60	50/50	×	×	×	●	●
EHK-05*	61	5	31.7	28.2	35	30	×	×	●	●	●
EHK-08*		7.5	44.7	39.5	45	40	×	×	●	●	●
EHK-10*		10	57.7	50.8	60	50	×	×	●	●	●
EHK-15*		15	57.7/26.1	50.8/22.6	60/30	50/25	×	×	●	●	●
EHK-20*		20	57.7/52.1	50.8/45.2	60/60	50/50	×	×	×	●	●

Note: Heater model number digits "*": A, B, C, D, E, F, etc.

Electric Heater Power Wiring Diagrams

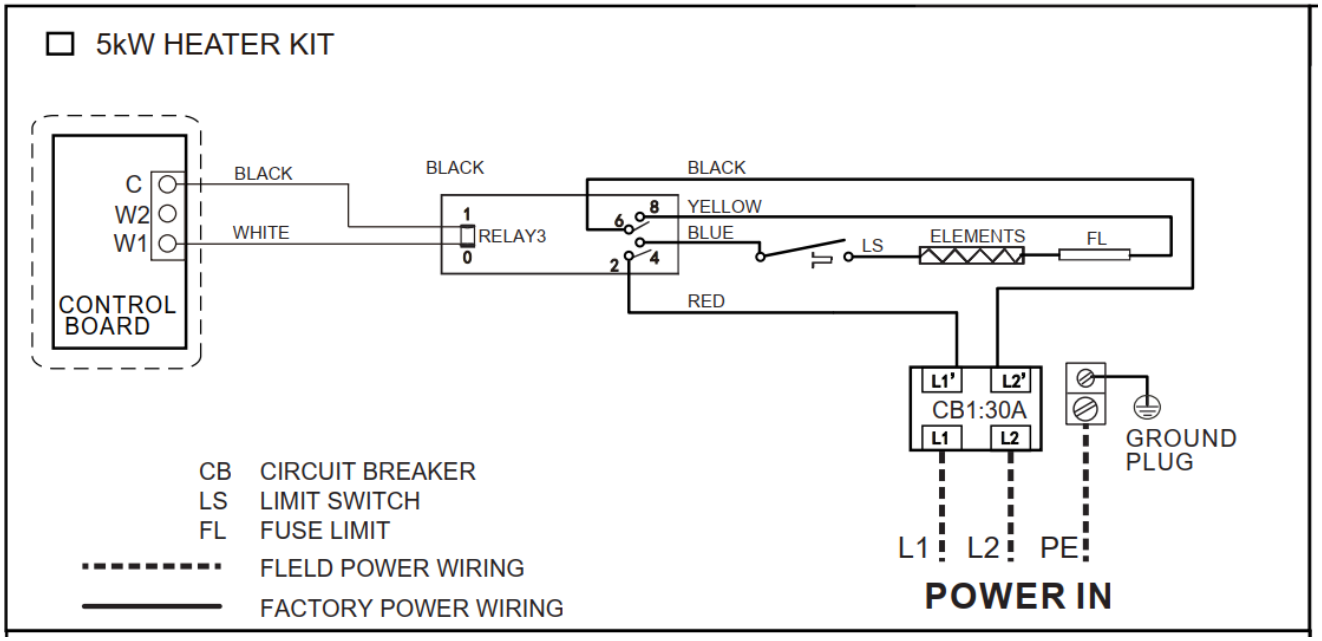

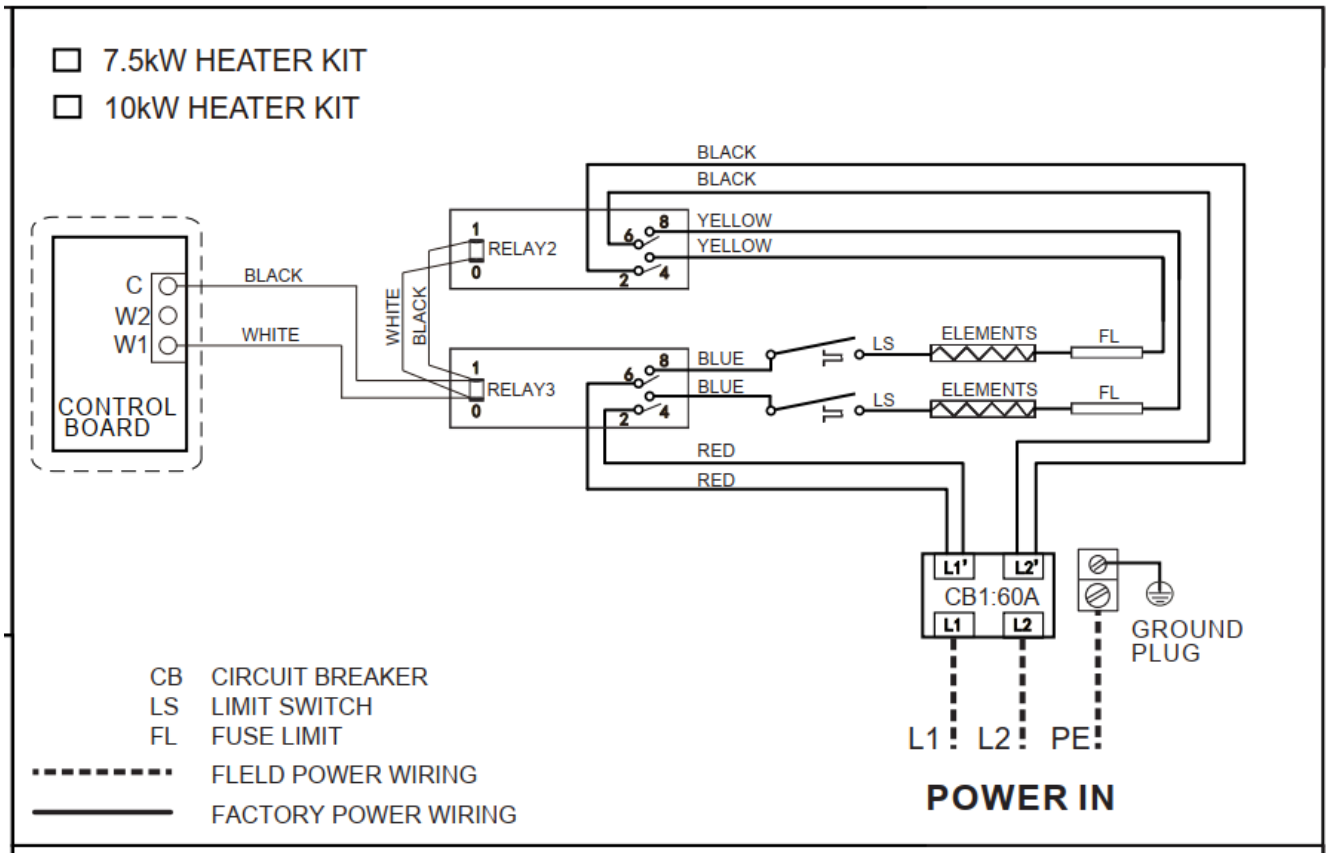

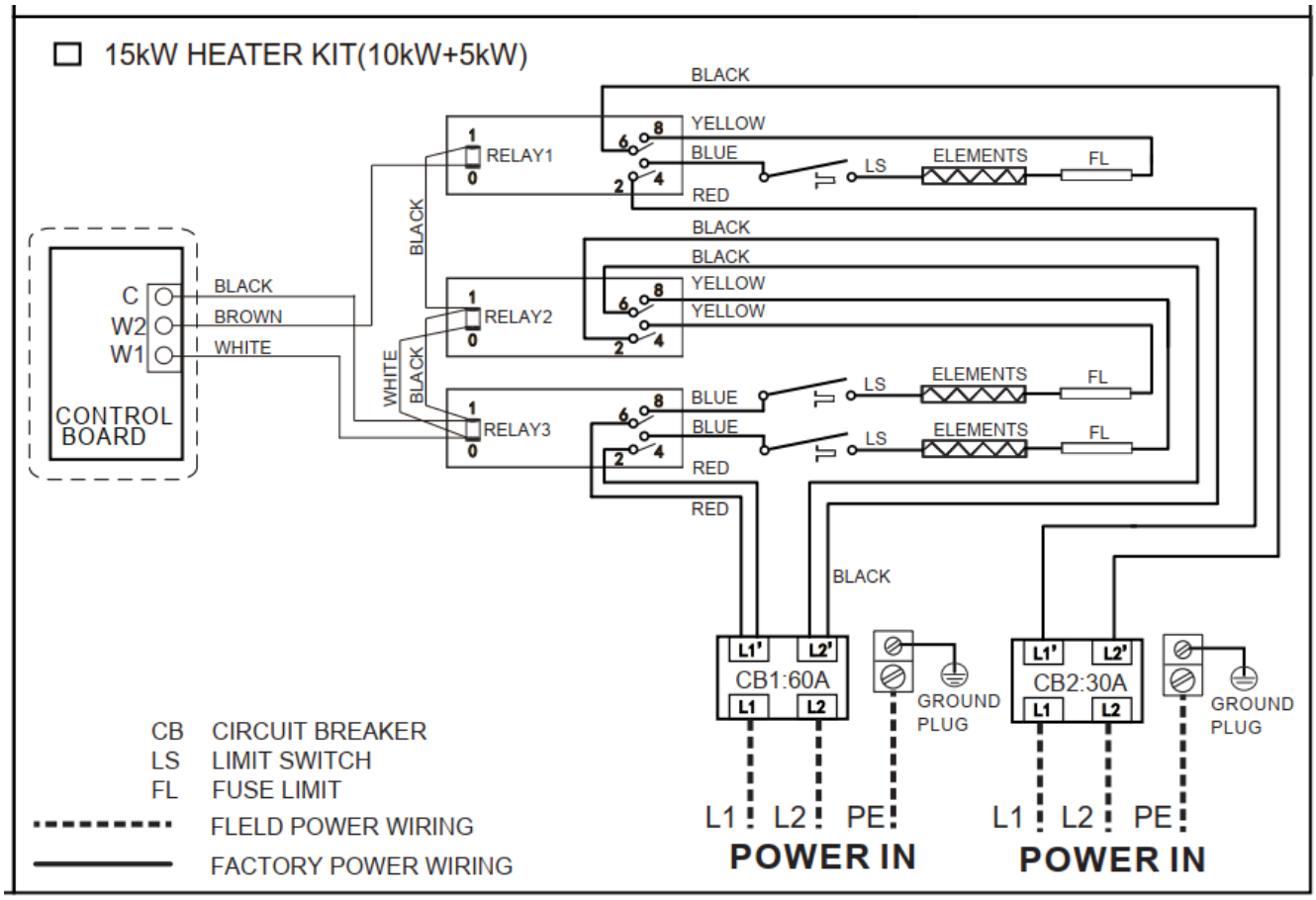
15kW HEATER KIT(10kW+5kW)
BLACK
YELLOW
BLUE
RED
RELAY1
RELAY2
RELAY3
LS
ELEMENTS
FL
C
W2
W1
BROWN
WHITE
CONTROL BOARD
CB1:60A
CB2:30A
L1'
L2'
L1
L2
GROUND PLUG
PE
POWER IN
CB CIRCUIT BREAKER
LS LIMIT SWITCH
FL FUSE LIMIT
FLELD POWER WIRING
FACTORY POWER WIRING

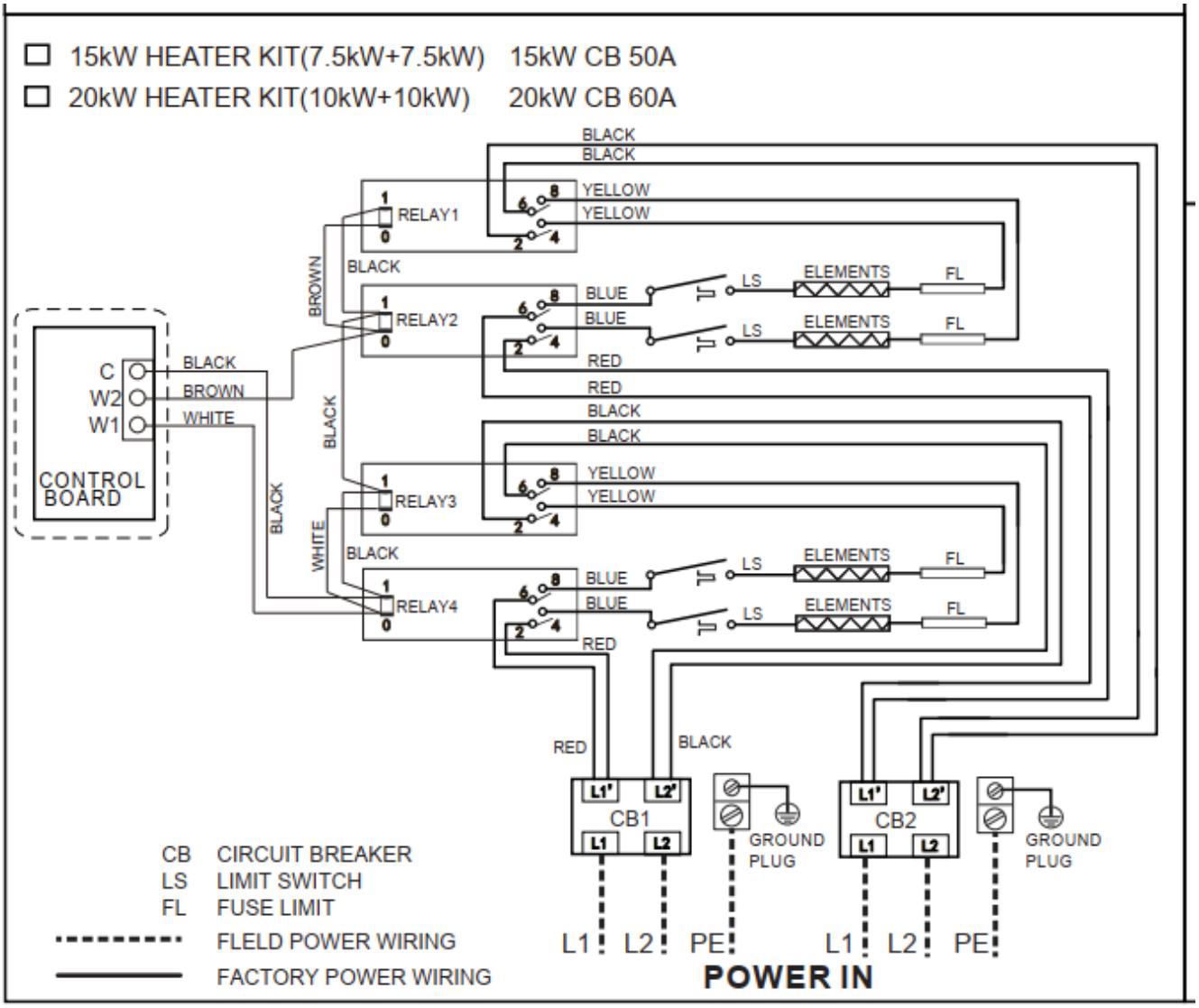
15kW HEATER KIT(7.5kW+7.5kW) 15kW CB 50A
20kW HEATER KIT(10kW+10kW) 20kW CB 60A
CONTROL BOARD
C
W2
W1
BLACK
BROWN
WHITE
RELAY1
RELAY2
RELAY3
RELAY4
YELLOW
BLUE
RED
LS
ELEMENTS
FL
CB1
CB2
L1'
L2'
L1
L2
GROUND PLUG
PE
POWER IN
CB CIRCUIT BREAKER
LS LIMIT SWITCH
FL FUSE LIMIT
FLELD POWER WIRING
FACTORY POWER WIRING

6 Airflow Data

Model Number	Outdoor Unit Size（Ton）	Motor Speed		CFM Wet Coil Without Filter and Electric Heat								
				External Static Pressure (in w.c)								
				0	0.1	0.2	0.3	0.4	0.5	0.6	0.7	0.8
24	1.5	1	Current / A	0.63	0.67	0.7	0.74	0.77	0.81	0.84	0.88	0.9
			Power / W	72	78	82	87	92	97	102	107	112
			CFM	676	608	550	492	422	369	311	274	233
		2	Current / A	0.81	0.85	0.89	0.93	0.97	1	1.04	1.09	1.12
			Power / W	98	103	109	114	120	124	130	136	140
			CFM	770	717	666	615	552	512	457	406	364
		3	Current / A	1.14	1.18	1.22	1.26	1.31	1.36	1.41	1.45	1.49
			Power / W	143	148	154	159	166	172	178	183	189
			CFM	903	856	808	767	722	665	618	577	535
		4	Current / A	1.42	1.46	1.51	1.55	1.6	1.65	1.69	1.75	1.8
			Power / W	179	185	191	197	203	210	215	223	229
			CFM	987	945	900	861	821	766	737	677	636
		5	Current / A	1.66	1.71	1.76	1.81	1.86	1.91	1.95	2	2.06
			Power / W	211	217	224	230	237	244	249	255	264
			CFM	1055.6	1012.3	970.6	930.3	883.4	844.9	811.8	774.8	715.3
24	2	1	Current / A	0.63	0.67	0.7	0.74	0.77	0.81	0.84	0.88	0.9
			Power / W	72	78	82	87	92	97	102	107	112
			CFM	676	608	550	492	422	369	311	274	233
		2	Current / A	0.81	0.85	0.89	0.93	0.97	1	1.04	1.09	1.12
			Power / W	98	103	109	114	120	124	130	136	140
			CFM	770	717	666	615	552	512	457	406	364
		3	Current / A	1.14	1.18	1.22	1.26	1.31	1.36	1.41	1.45	1.49
			Power / W	143	148	154	159	166	172	178	183	189
			CFM	903	856	808	767	722	665	618	577	535
		4	Current / A	1.42	1.46	1.51	1.55	1.6	1.65	1.69	1.75	1.8
			Power / W	179	185	191	197	203	210	215	223	229
			CFM	987	945	900	861	821	766	737	677	636
		5	Current / A	1.66	1.71	1.76	1.81	1.86	1.91	1.95	2	2.06
			Power / W	211	217	224	230	237	244	249	255	264
			CFM	1056	1012	971	930	883	845	812	775	715
36	2.5	1	Current / A	1.05	1.09	1.14	1.19	1.27	1.33	1.4	/	/
			Power / W	113	119	126	133	144	151	158	/	/
			CFM	1013	946	891	823	709	634	566	/	/
		2	Current / A	1.45	1.5	1.56	1.61	1.66	1.76	1.83	1.89	1.95
			Power / W	166	174	181	188	195	208	218	255	234
			CFM	1180	1123	1072	1023	969	865	794	733	674
		3	Current / A	1.87	1.93	1.99	2.05	2.1	2.15	2.25	2.35	2.42
			Power / W	224	232	240	248	255	262	276	288	299
			CFM	1335	1283	1231	1189	1146	1093	1009	923	864
		4	Current / A	2.42	2.49	2.55	2.61	2.67	2.73	2.79	2.87	2.99
			Power / W	299	308	317	325	334	342	350	361	378
			CFM	1484	1437	1386	1347	1309	1271	1231	1176	1075
		5	Current / A	2.92	2.99	3.07	3.14	3.19	3.25	3.35	3.49	3.50
			Power / W	369	378	388	397	404	411	424	441	443
			CFM	1560	1520	1480	1442	1403	1378	1323	1248	1179
36	3	1	Current / A	1.05	1.09	1.14	1.19	1.27	1.33	1.4	/	/
			Power / W	113	119	126	133	144	151	158	/	/
			CFM	1013	946	891	823	709	634	566	/	/
		2	Current / A	1.45	1.5	1.56	1.61	1.66	1.76	1.83	1.89	1.95
			Power / W	166	174	181	188	195	208	218	225	234
			CFM	1180	1123	1072	1023	969	865	794	733	674
		3	Current / A	1.87	1.93	1.99	2.05	2.1	2.15	2.25	2.35	2.42
			Power / W	224	232	240	248	255	262	276	288	299
			CFM	1335	1283	1231	1189	1146	1093	1009	923	864
		4	Current / A	2.42	2.49	2.55	2.61	2.67	2.73	2.79	2.87	2.99
			Power / W	299	308	317	325	334	342	350	361	378
			CFM	1484	1437	1386	1347	1309	1271	1231	1176	1075
		5	Current / A	2.92	2.99	3.07	3.14	3.19	3.25	3.35	3.49	3.50
			Power / W	369	378	388	397	404	411	424	441	443
			CFM	1560	1520	1480	1442	1403	1378	1323	1248	1179
48/60	3.5	1	Current / A	1.56	1.63	1.71	1.77	1.83	1.90	2.02	2.10	/
			Power / W	198	209	220	226	231	241	260	270	/
			CFM	1420	1374	1320	1269	1218	1158	1037	957	/
		2	Current / A	2.10	2.20	2.28	2.34	2.39	2.46	2.54	2.63	2.78
			Power / W	267	279	289	297	303	312	322	334	353
			CFM	1613	1558	1516	1469	1425	1375	1327	1274	1147
		3	Current / A	2.78	2.87	2.96	3.03	3.10	3.17	3.25	3.32	3.41
			Power / W	369	383	398	408	419	428	439	450	465
			CFM	1796	1757	1707	1663	1622	1580	1539	1467	1451
		4	Current / A	3.46	3.55	3.67	3.75	3.84	3.92	3.99	4.07	4.15
			Power / W	472	482	502	513	523	537	548	560	573
			CFM	1978	1944	1887	1850	1805	1765	1722	1678	1632
		5	Current / A	4.17	4.26	4.38	4.47	4.57	4.67	4.74	4.83	4.92

			Power / W	575	590	605	621	634	651	662	675	690
			CFM	2123	2092	2051	2011	1971	1922	1889	1852	1818
48/60	4	1	Current / A	1.56	1.63	1.71	1.77	1.83	1.90	2.02	2.10	/
			Power / W	198	209	220	226	231	241	260	270	/
			CFM	1420	1374	1320	1269	1218	1158	1037	957	/
		2	Current / A	2.10	2.20	2.28	2.34	2.39	2.46	2.54	2.63	2.78
			Power / W	281	294	305	313	319	329	339	351	371
			CFM	1613	1558	1516	1469	1425	1375	1327	1274	1147
		3	Current / A	2.78	2.87	2.96	3.03	3.10	3.17	3.25	3.32	3.41
			Power / W	369	383	398	408	419	428	439	450	465
			CFM	1796	1757	1707	1663	1622	1580	1539	1467	1451
		4	Current / A	3.46	3.55	3.67	3.75	3.84	3.92	3.99	4.07	4.15
			Power / W	472	482	502	513	523	537	548	560	573
			CFM	1978	1944	1887	1850	1805	1765	1722	1678	1632
		5	Current / A	4.17	4.26	4.38	4.47	4.57	4.67	4.74	4.83	4.92
			Power / W	575	590	605	621	634	651	662	675	690
			CFM	2123	2092	2051	2011	1971	1922	1889	1852	1818
48/60	5	1	Current / A	1.56	1.63	1.71	1.77	1.83	1.90	2.02	2.10	/
			Power / W	198	209	220	226	231	241	260	270	/
			CFM	1420	1374	1320	1269	1218	1158	1037	957	/
		2	Current / A	2.10	2.20	2.28	2.34	2.39	2.46	2.54	2.63	2.78
			Power / W	267	279	289	297	303	312	322	334	353
			CFM	1613	1558	1516	1469	1425	1375	1327	1274	1147
		3	Current / A	2.78	2.87	2.96	3.03	3.10	3.17	3.25	3.32	3.41
			Power / W	369	383	398	408	419	428	439	450	465
			CFM	1796	1757	1707	1663	1622	1580	1539	1467	1451
		4	Current / A	3.46	3.55	3.67	3.75	3.84	3.92	3.99	4.07	4.15
			Power / W	472	482	502	513	523	537	548	560	573
			CFM	1978	1944	1887	1850	1805	1765	1722	1678	1632
		5	Current / A	4.17	4.26	4.38	4.47	4.57	4.67	4.74	4.83	4.92
			Power / W	575	590	605	621	634	651	662	675	690
			CFM	2123	2092	2051	2011	1971	1922	1889	1852	1818

--- Shaded boxes represent airflow outside the required 300 to 450 cfm/ton, which are not recommended.

NOTES: Airflow based upon cooling performance at 230V with no electric heat or filter. Airflow at 208V is approximately the same as 230V because the multi-tap ECM motor provides constant torque with no drop off relative to motor operating speed.

The air distribution system has the greatest effect on airflow and is in the control of the installing contractor. For this reason, the contractor should use only industry-recognized procedures.

Heat pump systems require a specified airflow for electric heat operating. Each ton of cooling requires between 350 and 450 cubic feet of air per minute (CFM), or 400 CFM nominally.

Duct design and construction should be carefully done. System performance can be lowered dramatically through poor planning or workmanship.

Air supply diffusers must be selected and located carefully. They must be sized and positioned to deliver treated air along the perimeter of the space. If they are too small for their intended airflow, they would become noisy. If they are not located properly, they cause drafts. Return air grilles must be properly sized to carry air back to the blower. If they are too small, they also can cause noise.

Installers should balance the air distribution system to ensure sufficient, quiet airflow to all spaces to ensure maximum occupant comfort.

An air velocity meter or airflow hood can be used to balance and verify branch and system airflow (CFM).

7 Attached Fittings

	Name	Appearance	Quantity	Name	Appearance	Quantity
Installation Fittings	Indoor unit operation and installation manual		1	Sealing ring		3
	Accessory package		1	Alarm output wires	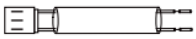	1
	Seal plug		2	Pipe Joint	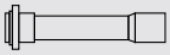	1
	Hook		1			

Note：The above applies to most models however the list of included items may vary from model to model.

Before installation, confirm all the items above are present. Keep all these accessories on hand for future use if necessary. All fittings should be OEM factory fittings.

8 Wiring Diagram

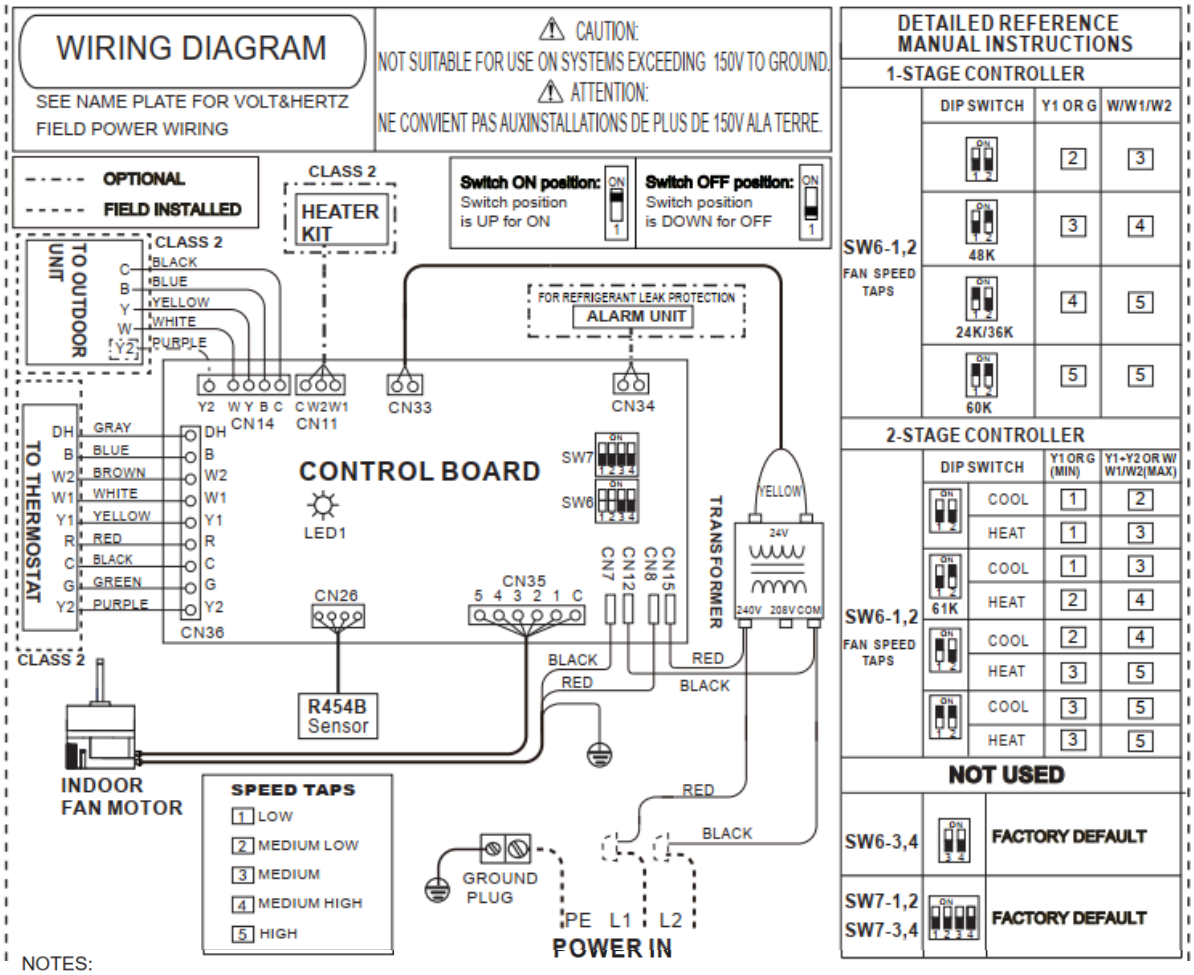

DETAILED REFERENCE MANUAL INSTRUCTIONS

1-STAGE CONTROLLER

	DIP SWITCH	Y1 OR G	W/W1/W2
SW6-1,2 FAN SPEED TAPS		2	3
	48K	3	4
	24K/36K	4	5
	60K	5	5

2-STAGE CONTROLLER

	DIP SWITCH		Y1 OR G (MIN)	Y1+Y2 OR W/ W1/W2(MAX)
SW6-1,2 FAN SPEED TAPS		COOL	1	2
		HEAT	1	3
	61K	COOL	1	3
		HEAT	2	4
		COOL	2	4
		HEAT	3	5
		COOL	3	5
		HEAT	3	5

NOT USED

SW6-3,4		FACTORY DEFAULT
SW7-1,2 SW7-3,4		FACTORY DEFAULT

NOTES:

1: If connected to the 1-Stage controller, please short the signals Y1 and Y2.

2: Connect R to R, G to G, Y to Y, etc. See outdoor instruction for details.

3: If some signal lines of **CN36** are not used, please wrap them up separately with **CAP**.

⚠ CAUTION:

1: Use copper wire (75 ℃ min) only between disconnect switch and unit.

2: To be wired in accordance with **NEC** and local codes.

3: If any of the original wires, as supplied, must be replaced. Use the same or equivalent type wires.

4: If the input voltage is 208 V, please change the transformer tap by taking the red wire to **208V** terminal.

5: The rated operating condition of **Alarm** is 24 VAC/1A or 30 VDC/1A or 250 VAC/1A. Please refer to the manual for wiring methods.

LED1 STATUS	CONTENT
STEADY ON	NORMAL OPERATION
OFF	POWER SUPPLY FAILURE
KEEP FLASHING	REFRIGERANT LEAK PROTECTION
3 FLASH/CYCLE	**R454B** REFRIGERANT SENSOR FAULT
4 FLASH/CYCLE	**R454B** REFRIGERANT SENSOR COMMUNICATION FAULT
8 FLASH/CYCLE	**R454B** SENSOR OVER SERVICE LIFE

Factory code	Date	Revision
16023000014752	Mar. 20th, 2024	D

Ver. 2024-10V2