WIRING DIAGRAM

SEE NAME PLATE FOR VOLT&HERTZ
FIELD POWER WIRING

⚠ CAUTION:
NOT SUITABLE FOR USE ON SYSTEMS EXCEEDING 150V TO GROUND.
⚠ ATTENTION:
NE CONVIENT PAS AUXINSTALLATIONS DE PLUS DE 150V ALA TERRE.

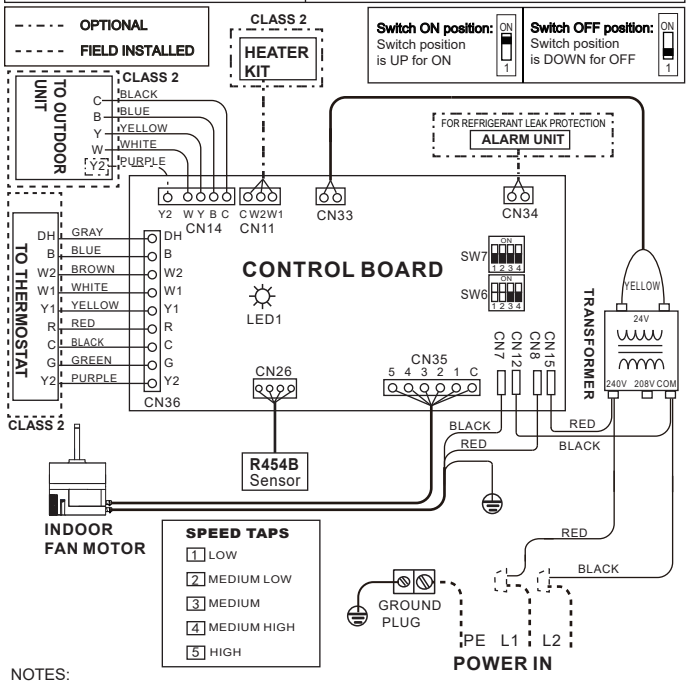

DETAILED REFERENCE MANUAL INSTRUCTIONS

1-STAGE CONTROLLER

	DIP SWITCH	Y1 OR G	W/W1/W2
SW6-1,2 FAN SPEED TAPS	ON 1 2	2	3
	ON 1 2 48K	3	4
	ON 1 2 24K/36K	4	5
	ON 1 2 60K	5	5

2-STAGE CONTROLLER

	DIP SWITCH		Y1 OR G (MIN)	Y1+Y2 OR W/ W1/W2(MAX)
SW6-1,2 FAN SPEED TAPS	ON 1 2	COOL	1	2
		HEAT	1	3
	ON 1 2 61K	COOL	1	3
		HEAT	2	4
	ON 1 2	COOL	2	4
		HEAT	3	5
	ON 1 2	COOL	3	5
		HEAT	3	5

NOT USED

SW6-3,4	ON 3 4	FACTORY DEFAULT
SW7-1,2 SW7-3,4	ON 1 2 3 4	FACTORY DEFAULT

NOTES:

1: If connected to the 1-Stage controller, please short the signals Y1 and Y2.
2: Connect R to R, G to G, Y to Y, etc. See outdoor instruction for details.
3: If some signal lines of **CN36** are not used, please wrap them up separately with **CAP**.

⚠ CAUTION:

1: Use copper wire (75 ℃ min) only between disconnect switch and unit.
2: To be wired in accordance with **NEC** and local codes.
3: If any of the original wires, as supplied, must be replaced. Use the same or equivalent type wires.
4: If the input voltage is 208 V, please change the transformer tap by taking the red wire to **208V** terminal.
5: The rated operating condition of **Alarm** is 24 VAC/1A or 30 VDC/1A or 250 VAC/1A. Please refer to the manual for wiring methods.

Airdach
Heating & Air Conditioning

LED1 STATUS	CONTENT
STEADY ON	NORMAL OPERATION
OFF	POWER SUPPLY FAILURE
KEEP FLASHING	REFRIGERANT LEAK PROTECTION
3 FLASH/CYCLE	**R454B** REFRIGERANT SENSOR FAULT
4 FLASH/CYCLE	**R454B** REFRIGERANT SENSOR COMMUNICATION FAULT
8 FLASH/CYCLE	**R454B** SENSOR OVER SERVICE LIFE

Factory code	Date	Revision
16023000014752	Mar. 20th, 2024	D